NOTES:
ALL MOTORS AND CONTROLS ARE PREWIRED
ALL PROCESS AND SERVICE LINES ARE PREPIPED

SHIPPING WEIGHT ≈ 5,750 LBS.
OPERATING WEIGHT ≈ 9,250 LBS.

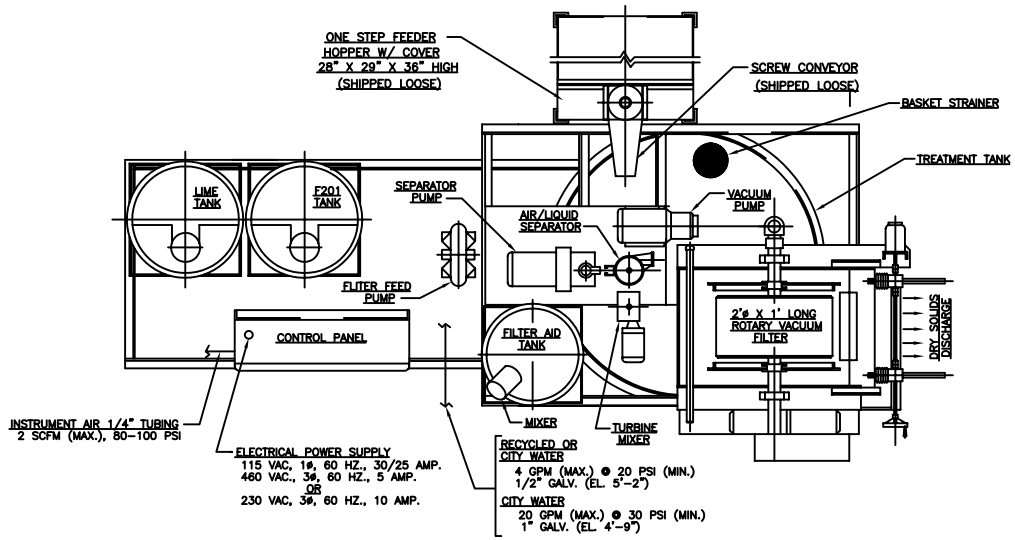

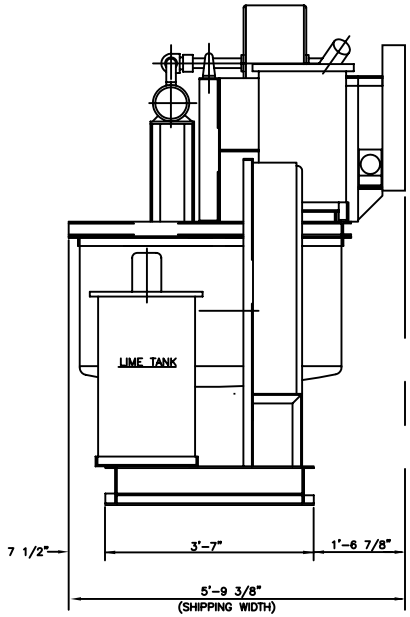

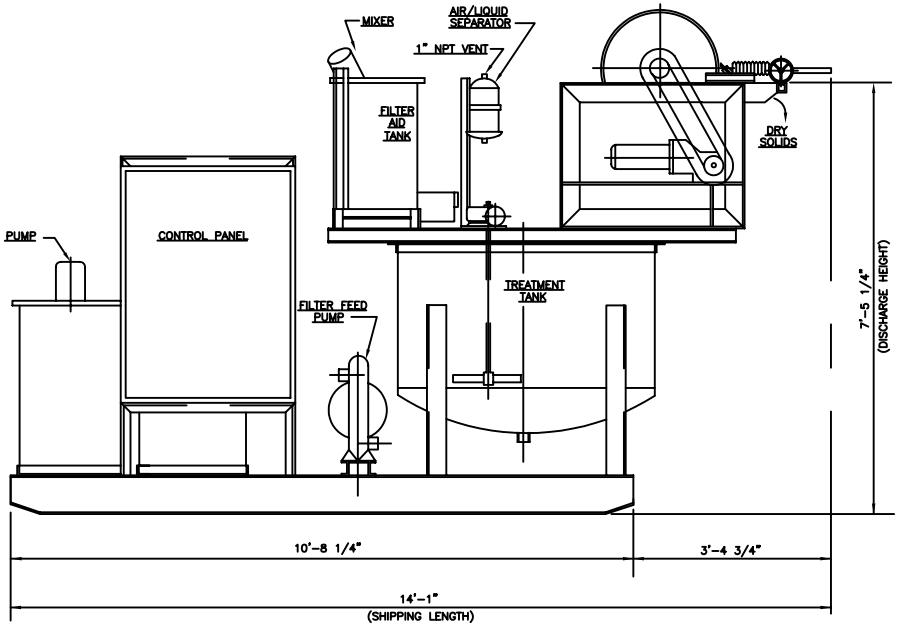

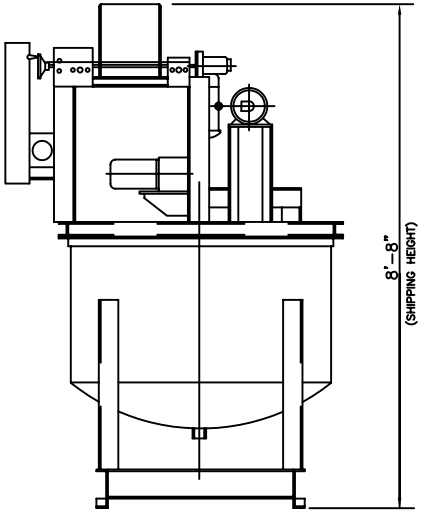

REV.	DATE	DESCRIPTION	BY	APP'D.
A	7-11-00	FOR INFORMATION	ACS	

ALAR ENGINEERING CORPORATION
MOKENA, ILLINOIS 60448

SCALE 1"=1'-0" | APPROVED BY: | DRAWN BY RLL
DATE 7-11-00 | CHK'D.

FLEX-O-STAR 200 PLUS LAYOUT
(PLAN & ELEVATION)

REVISION A | DRAWING NUMBER FLEX-O-STAR 200 PLUS