NOTES:-
ALL MOTORS AND CONTROLS ON THIS SKID ARE PREWIRED
ALL PIPING AND ELECTRICAL WORK BETWEEN THE FILTER AND AUXILIARY SKID IS BY OTHERS.

SHIPPING WEIGHT = 6,000 LBS.

OPERATING WEIGHT = 18,000 LBS.

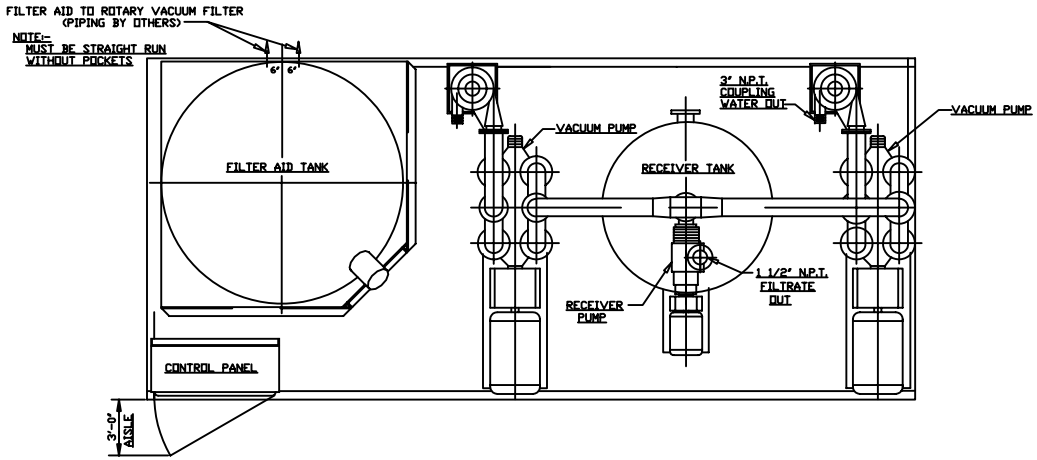

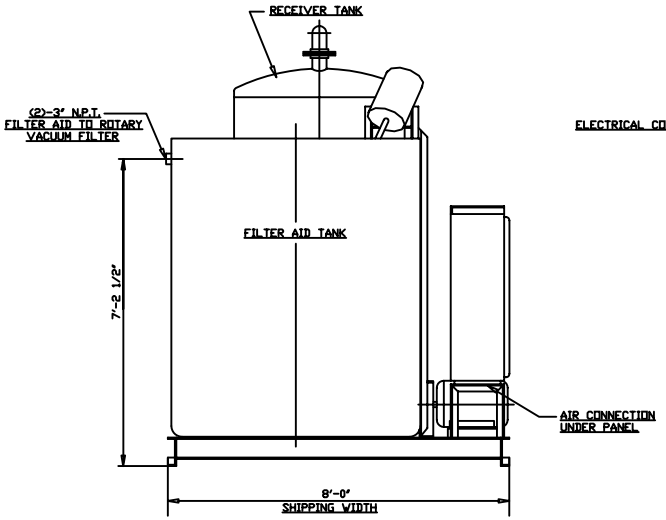

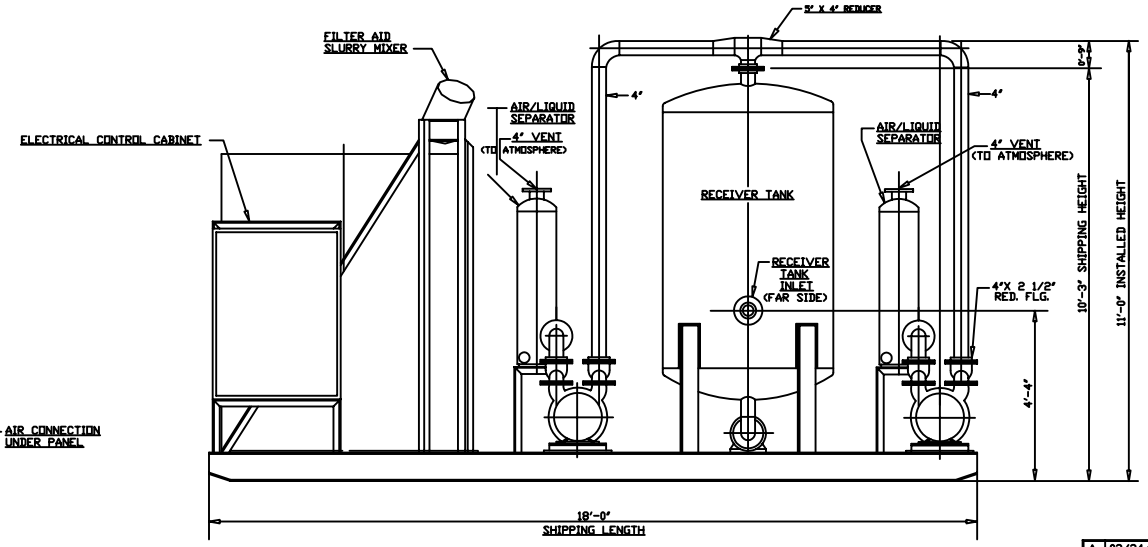

REV.	DATE	DESCRIPTION	BY	APP'D.
A	02/24/99	FOR RELEASE	RLL	

ALAR ENGINEERING CORPORATION
MOKENA, ILLINOIS 60448

SCALE 3/4"=1'-0" | APPROVED BY | DRAWN BY RLL
DATE 02/24/99 | CHK'D. BY

AUXILIARY SKID FOR AUTO-VAC MODEL 6120 ROTARY VACUUM FILTER (PLAN AND ELEVATION)

REVISION A | DRAWING NUMBER AUTO-VAC 6210-2